Packing Nut for Brass Gate Valve (BGV)

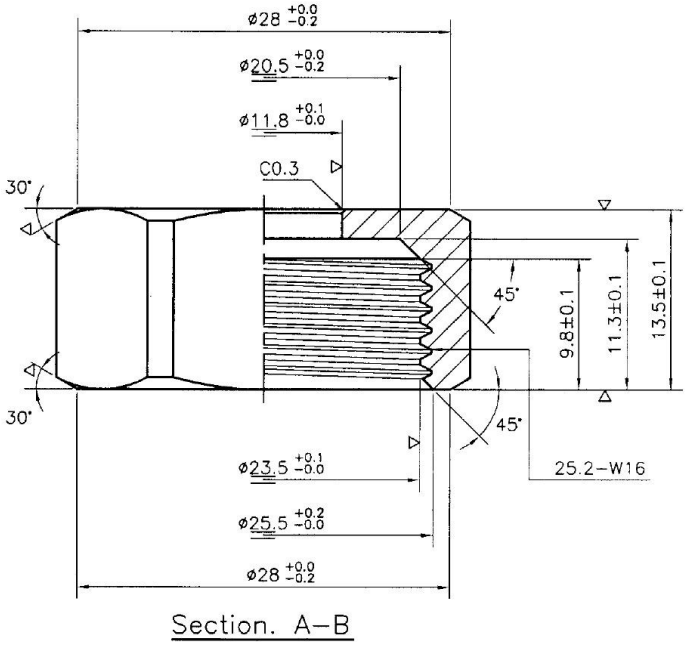

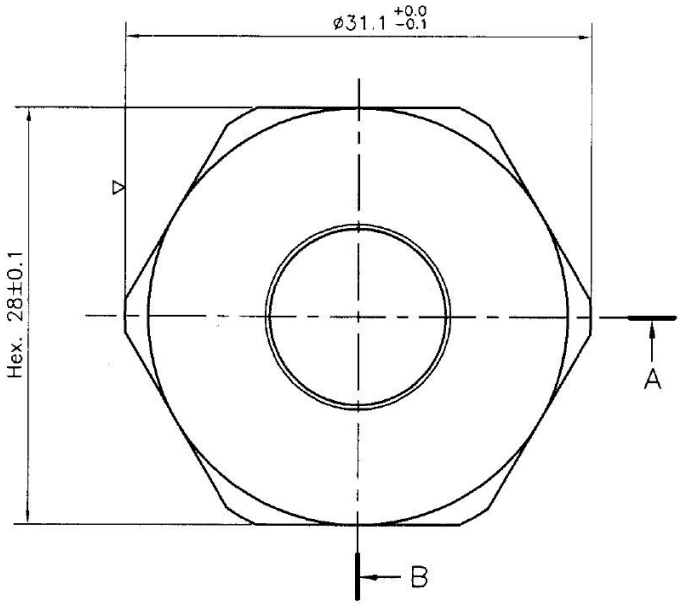

Model Numbers

- 9018 - For 1/2" and 3/4" Brass Gate Valves
- 9019 - For 1" Brass Gate Valves
- 9020 - For 1-1/4" and 1-1/2" Brass Gate Valves
- 9021 - For 2" Brass Gate Valves
- 9022 - For 2-1/2" and 3" Brass Gate Valves
- 9023 - For 4" Brass Gate Valves

- Witworth Threading

9169 Pulsar Court
Corona, California 92883
P 951.808.0852 F 951.808.0906
www.aqualineinc.com